DETALII DE FUNDATII / DETAILS FOUNDATIONS
scara 1:20 / scale 1:20

Sectiune 1-1 / Section 1-1
sc. 1:20

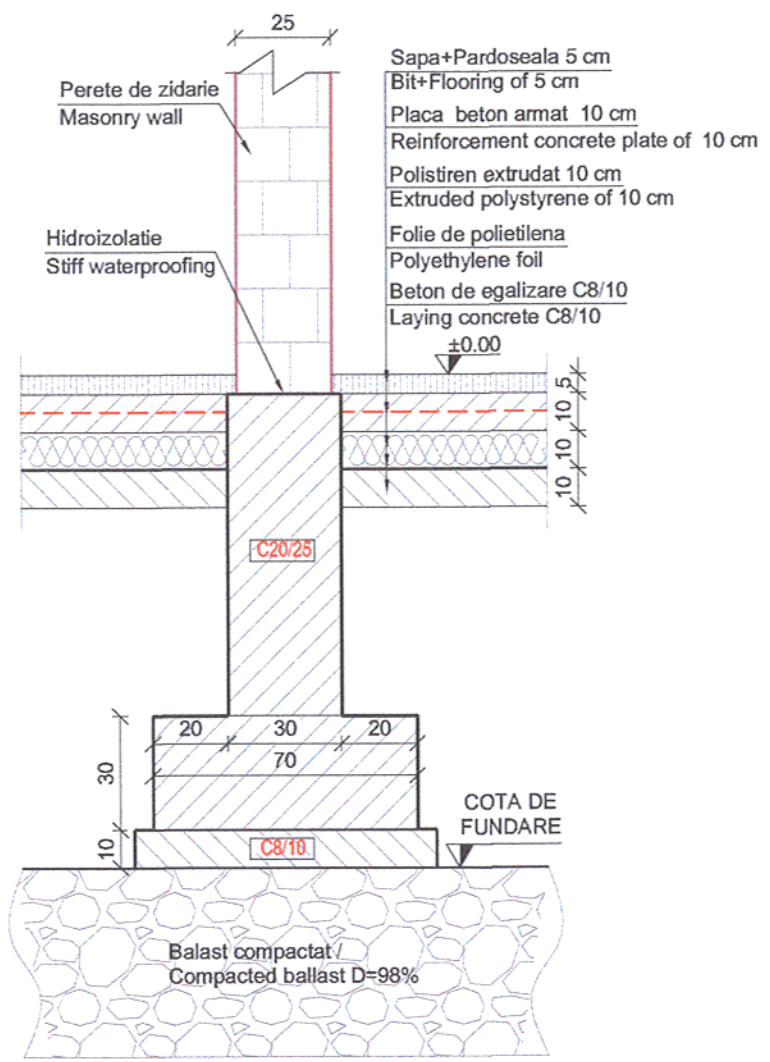

Sectiune 2-2 / Section 2-2
sc. 1:20

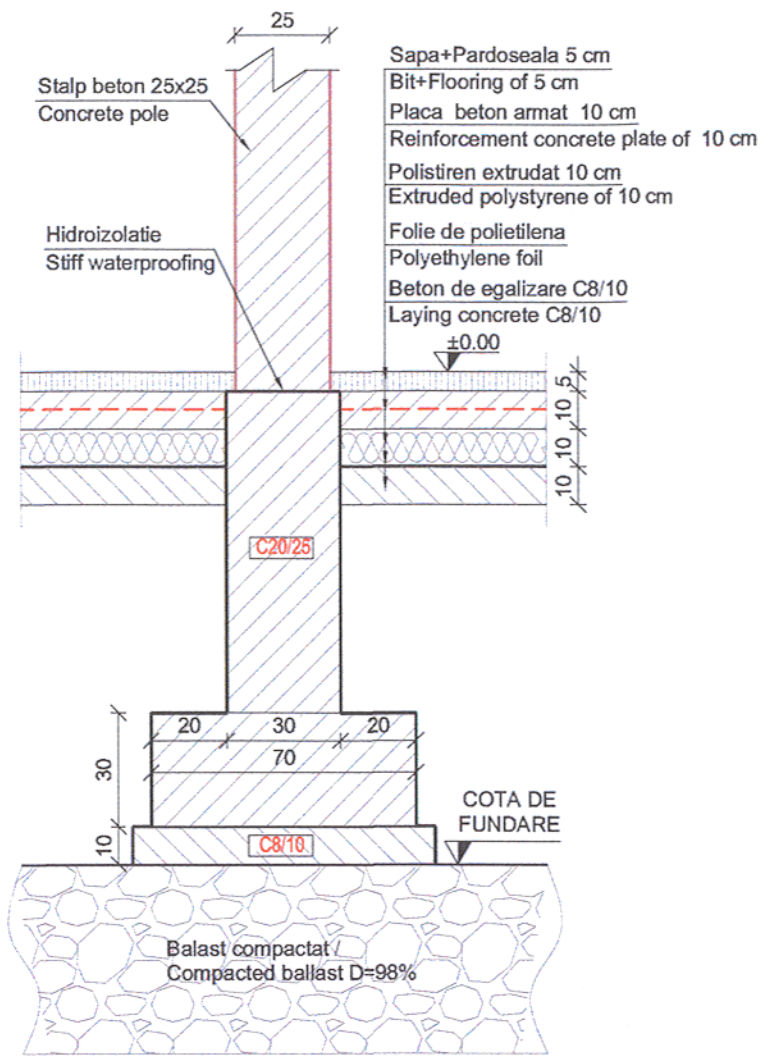

ARMARE FUNDATII / REINFORCEMENT FOUNDATIONS
scara 1:20 / scale 1:20

Sectiune 1-1 / Section 1-1
sc. 1:20

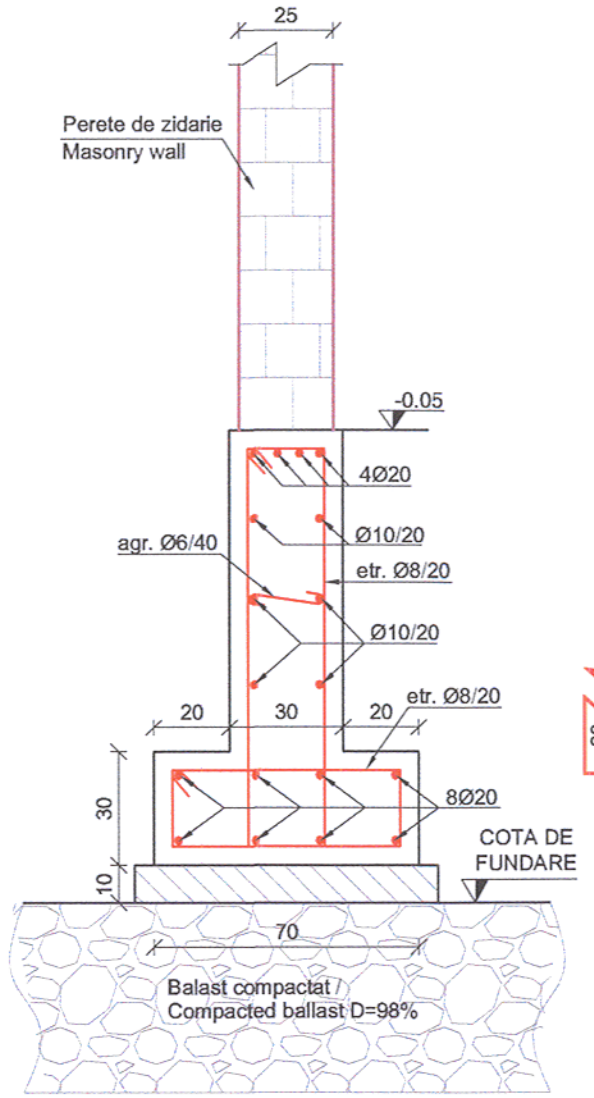

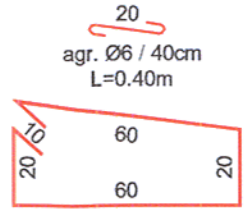

Sectiune 2-2 / Section 2-2
sc. 1:20

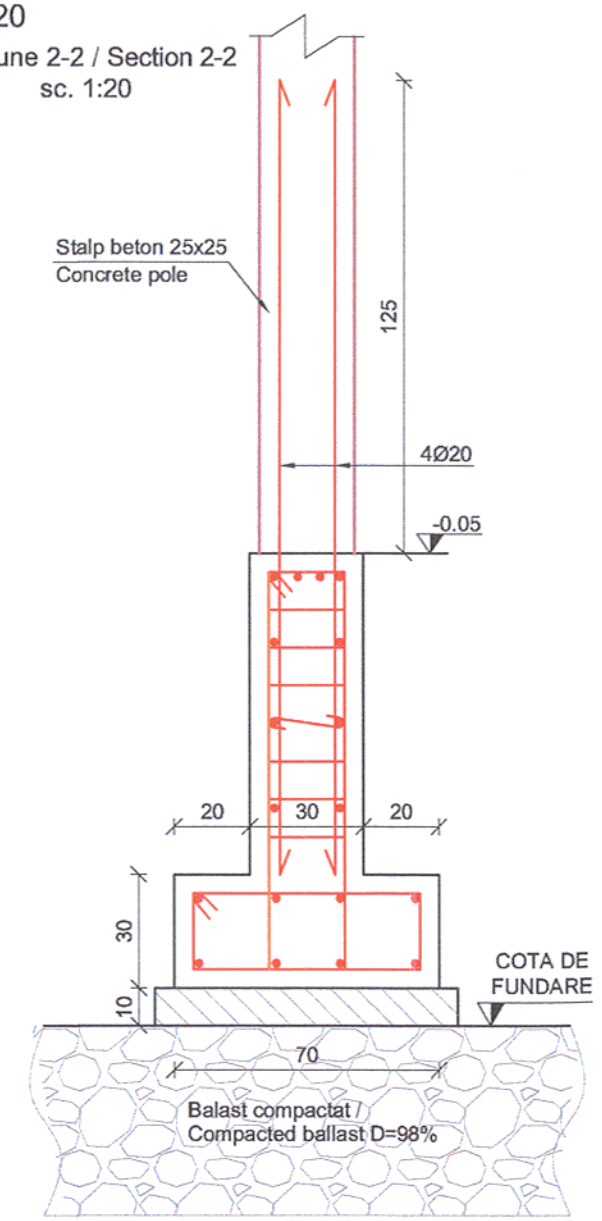

Sectiune stalp / Pole section
S1A 35x35, S1B 35x35,
S6A 35x35, S6B 35x35
scara 1:20 / scale 1:20

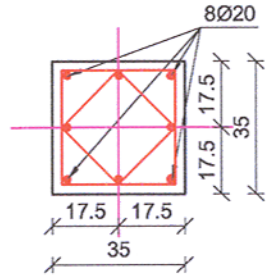

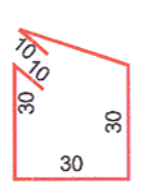

etr Ø8 / 10 / 20cm
L=1.40m

LEGENDA / LEGEND:
- Beton armat / Concrete C20/25
- Beton de egalizare / Laying concrete C8/10
- Balast compactat / Compacted ballast D=98%
- Armatura / Reinforcement Bst 500

MATERIALE:
Beton simplu C8/10 ;
Beton armat C20/25 CEM II/A-S 42.5 N ; sort 0-31; A/C : 0.55 ;
Otel Beton Bst 500 ;
Clasa de expunere: XC4, XD1.

MATERIALS:
Concrete C8/10 ;
Reinforced concrete C20/25 CEM II/A-S 42.5 N ; sort 0-31 A/C : 0.55 ;
Reinforcement Bst 500 ;
Exposure class: XC4, XD1.

NOTA:
Terenul de fundare se considera orizontal si omogen (perna de balast).
Presiunea conventional de calcul s-a considerat Pconv = 220kPa.
Apa subterana este mult sub cota de fundare.
Cota ±0.00 = cota pardoselii finite la parter.

NOTE:
The foundation soil is considered horizontally and homogenous (ballast pillow)
The conventional calculation pressure was considered Pconv = 220kPa.
The underground water is far below the foundation level
The level ±0.00 = the level of the finite floor from the ground floor.

NOTĂ / NOTE:
Toate tipurile de oțel (în special Bst 500) vor avea obligatoriu clasa de ductilitate C.
All types of steel (especially Bst 500) will mandatory have the ductility class C.

Proiectul de structura se va corela cu proiectul celorlale specialitati (parte scrisa si parte desenata).
The structural project (blueprints, tehnical briefs, technic specifications) will be corelated with the other specialitis' projects (blueprints, tehnical briefs, technic specifications).

Acest plan anuleaza si inlocuieste planul nr. PT.02.04.18.RE.05.002 elaborat la data 01.2013.

This layout plan canceled and replaced layout plan no. PT.02.04.18.RE.05.002 prepared on 01.2013.

CLASA DE IMPORTANTA A CONSTRUCTIEI
CONFORM P100/1-2006 ESTE (III)
CATEGORIA DE IMPORTANTA
CONFORM HG nr. 766/97 este (C)

THE CONSTRUCTION IMPORTANCE CLASS,
ACCORDING TO P 100/1-2006, IS (III)
THE IMPORTANCE CATEGORY,
ACCORDING TO HG 766/97 IS "C"

Verificator / Expert Checker / Expert	Cerinta Requirement	Semnătura Signature	Referat / Expertiza Report / Expertise

European Investment Bank

MINISTERUL TRANSPORTURILOR

BENEFICIAR / BENEFICIARY :
COMPANIA NAȚIONALĂ DE CĂI FERATE "CFR" SA

PROIECTANT / DESIGNER: PÖYRY			Data Date	Semnătura Signature
Aprobat Approved	Şef de echipă Team leader	C. Teodorescu	01.2013	
Verificat Checked	Expert Cheie Key Expert	R. Witan	01.2013	
Subcontractant / Subcontractor VIOTOP				
Aprobat Approved	Adjunct Şef de echipă Deputy Team leader	A.M. Baicu	01.2013	
Proiectat Designed	Inginer Engineer	G. Staicu	01.2013	

"Reabilitarea liniei c.f. Frontier ă - Curtici - Simeria, parte componentă a coridorului IV Pan - European pentru circula ţia trenurilor cu viteză maximă de 160 km/h"
Tronsonul 2 - C: Cap Y Ilteu - Cap Y Gurasada
"Rehabilitation of the Railway Line Border - Curtici - Simeria, component Part of the IV Pan - European Corridor for the Trains Circulation with maximum speed of 160 km/h"
Section 2 - C: End Y Ilteu - End Y Gurasada

Project 9i 35311.1

Faza / Phase: PTh+CS / TD+TS

Denumire desen / Drawing name:
Detalii fundații - Clădire călători - Stația Câmpuri Surduc /
Details foundation - Passenger building - Câmpuri Surduc Station

Scara / Scale	Revizia / Revision	Cod desen / Drawing Code	Nr / No
1:20	1/05.2013	PT.2C.04.18.RE.05.002	02/09